Offset Phase Lock Servo

D2-135 Offset Phase Lock Servo (OPLS)

Model No. D2-135-SMA / D2-135-FC

Document Revision: 2

Document Last Updated on 2021/08/26 14:26

Please read Limited Warranty and General Warnings and Cautions prior to operating the D2-135.

A quick-start guide is available for the D2-135.

Description

The D2-135 Offset Phase Lock Servo (OPLS) locks the frequency and phase of the input beat-note to a (multiple of the) reference frequency. The beat-note is typically generated by overlapping two lasers (a master laser and a slave laser), whose interference forms a beat-note, which is a measurement of the frequency difference (or offset) between the two lasers. The beat-note is either input as an electrical signal via an SMA electrical connector (D2-135-SMA) or as an optical signal via a fiber (D2-135-FC; obsolete). The reference frequency can be sourced internally from a voltage controlled oscillator (VCO) or externally from a user-input frequency reference. The output of the OPLS adjusts the frequency of the slave laser to lock the frequency offset between the two lasers.

The beat-note input to the OPLS can be divided by N = 8, 16, 32, or 64 – as set by the user – before its frequency and phase is compared to the reference frequency. The locked frequency offset is given by the formula:

`Offset = N x Reference Frequency.`

By adjusting either the reference frequency or N, the frequency difference between the lasers can be precisely adjusted. The offset frequency is adjustable from 250 MHz to ≥9.5 GHz.

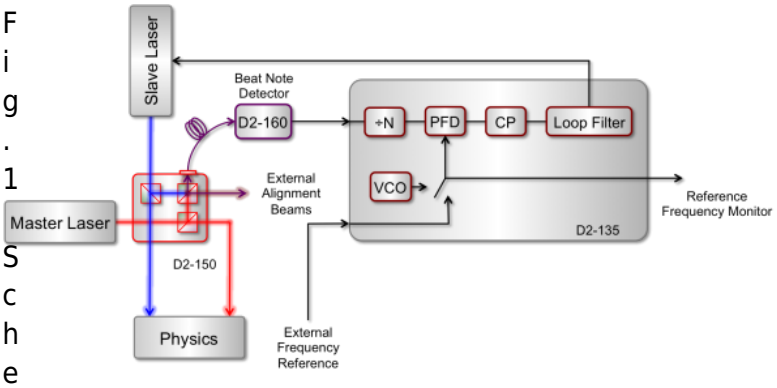

Fig. 1 Schematic of the D2-135 Offset Phase Lock Servo, D2-160 Beat Note Detector, and D2-150 Heterodyne Module

A schematic of the OPLS, along with the D2-160 Beat Note Detector and D2-150 Heterodyne module is shown in figure 1. The key component in the OPLS is a phase-frequency detector (PFD). The PFD compares the phase and frequency of the divided-by-N beat note to the reference frequency. The PFD outputs a signal proportional to the phase difference between the two input frequencies when there are no phase-slips between the two signals. This output provides a true phase-lock error signal. When there are phase slips, the PFD acts as a frequency comparator, aiding initial lock-up and enabling the OPLS to function as a *frequency offset lock* for laser sources with significant phase noise such as DFB and DBR laser diodes. The output of the PFD is fed to a charge pump and finally to the loop filter, where it is then fed back to the slave laser to control the frequency of the beat note.

The loop filter has user-adjustable proportional-integral-differential (PID) feedback and an additional high-frequency roll-off frequency. Tuning the values of the PID loop filter allows the user to optimize the feedback to the laser for best offset locks. This is further discussed below.

The OPLS can be controlled via the front-panel, or with a computer via a 9 pin D-sub connector and BNC connections on the back of the OPLS. In this way, the frequency offset can be jumped and tuned via an external computer.

The D2-150 Heterodyne Module is designed for use the with D2-160 Beat Note Detector and D2-135-SMA or just the D2-135-FC (obsolete).

Purchase Includes

- D2-135 Offset Phase Lock Servo
- VPN00465 BNC cable (1ft)
- VPN00TBD SMA cable (1ft)
- VPN00457 Trimpot tweaker (large)
- VPN00458 Trimpot tweaker (small)
- VPN00456 DB9 Power Cable (1ft)

Options

The D2-135 comes in two different versions:

- *D2-135-SMA* - SMA input of the electrical beat-note
- *D2-135-FC-800* - Fiber-input of optical beat-note for wavelengths 750nm - 870nm (obsolete)

The D2-135-SMA requires an electrical signal input between 10 and -10 dBm of power.

The D2-135-FC-800 is no longer available, but information regarding it is retained for those users who have purchased this model. It includes a 10 GHz GaAs high-speed photo-detector for converting the input optical beat-note into a electrical beat-note. The maximum optical input power is 1 mW. *Warning: input powers over 1mW of optical power can damage the OPLS.* A minimum of 50 µW of power in the optical beat-note is required[1)].

Absolute Maximum Ratings

Note: All modules designed to be operated in laboratory environment

Parameter	Rating
Environmental Temperature	>15°C and <30°C
Environmental Humidity	<60%
Environmental Dew Points	<15°C

Specifications

	Value	Units
Min Offset Frequency[2)]	<250	MHz
Max Offset Frequency	Min: 9.5, Typical: 10[3)]	GHz
VCO drift	200	ppm/°C
PFD Noise[4)]	-213	dBc/Hz
ω_I (Integral/Prop. zero)	4,8,16,32,64,125,250,500	kHz
ω_D (Proportional/diff. zero)	16,32,64,125,250,500,1000,off	kHz

ω_{HF} (high freq. cutoff pole)	0.25, 0.5, 1,2,4,8,16,off	MHz
Servo Output Range	±10	V
Electronics Input / Output Impedance	50	Ω
User Adjustable Gain[5)]	0 to -76	dB
Max Electronic Beat-Note Input (D2-135-SMA)	10	dBm
Min Electronic Beat-Note Input (D2-135-SMA)	-10	dBm
Min Electronic Beat-Note S/N (D2-135-SMA)	>50	dB
Max Optical Beat-Note Input (D2-135-FC; obsolete)	1	mW
Min Optical Beat-Note Input (D2-135-FC; obsolete)[6)]	50	µW
Front-panel Input Connection (D2-135-FC; obsolete)[7)]	SC	
Front-panel Input Connection (D2-135-SMA)	SMA	
External Reference Input Range	-10 to +10	dBm

Modes

The OPLS operates in 12 different modes, controlled by the front-panel knob or with external inputs to the back-panel. These 12 modes select the value of the divide-by-N (N=8,16,32, or 64) and select between three states for the reference frequency (external input, internal VCO High, internal VCO Low). The table below shows the offset frequency ranges for these 12 different modes.

		Divide-by-N settings			
		N=8	**N=16**	**N=32**	**N=64**
Reference Frequency Setting	**External**	250 - 1,920	480 - 3,840	960 - 7,680	1,920 - 10,000
	VCO Low	385 - 850	770 - 1,700	1,540 - 3,400	3,080 - 6,800
	VCO High	770 - 1,700	1,540 - 3,400	3,080 - 6,800	6,160 - 10,000

Tab. 1: Offset frequency ranges for the 12 modes. All frequencies are in MHz.

Inputs, Outputs, and Controls

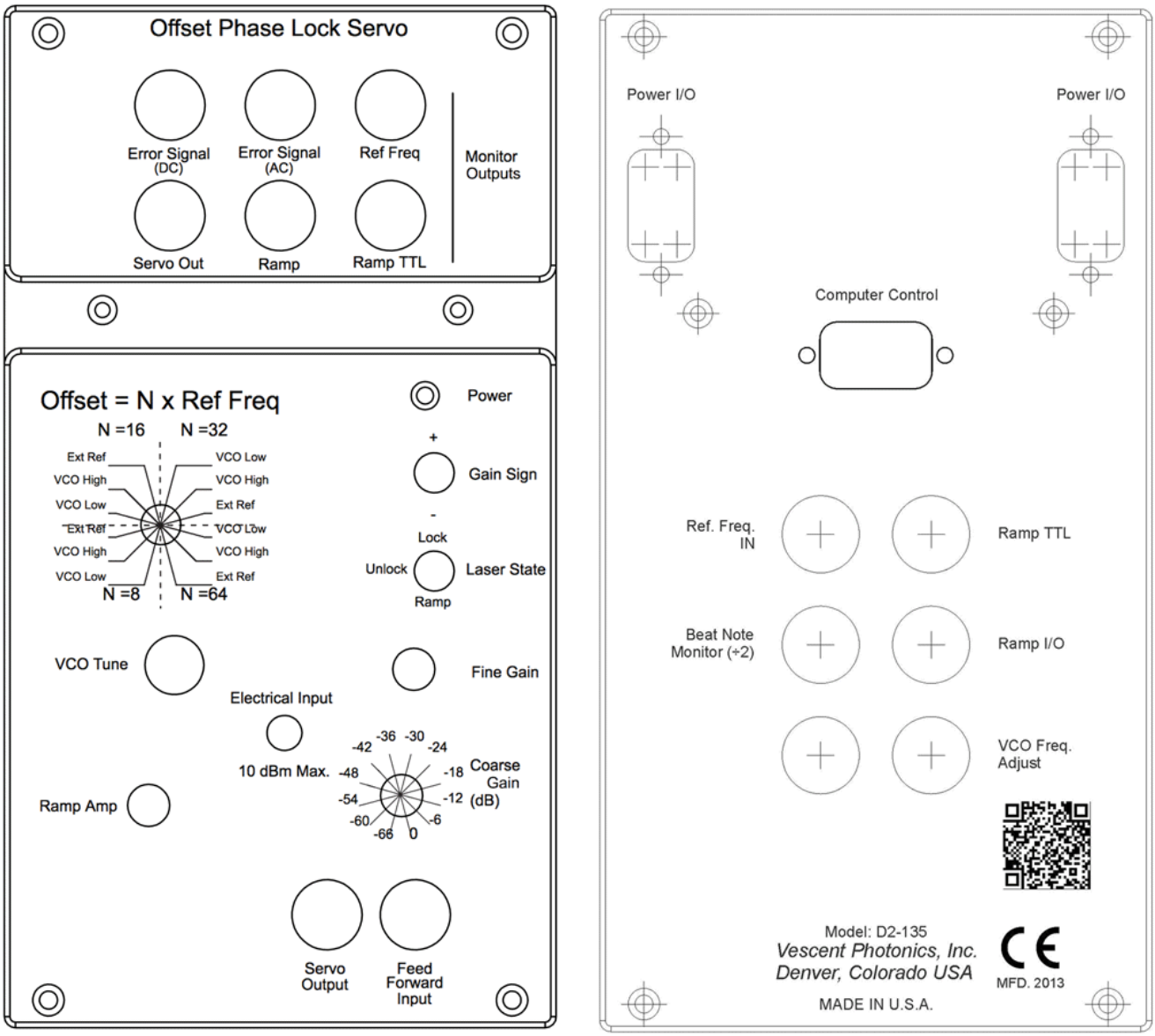

Fig. 2: Schematic drawing of the front and back panels for the D2-135-SMA

Monitor Section

Located at the top of the front panel, the monitor section contains 6 BNC outputs for monitoring various signals used by the OPLS.

Error Signal (DC)

This is a heavily filtered monitor of the charge pump (CP) output. When the laser is phase-locked, the CP output is proportional to phase error between the divided down beat-note and the reference signal given by $N*11^{mv}/_{deg}*\theta$, where θ is the phase-error in degrees. When the laser is not phase-locked, the output is $\pm 4V*(1-f_{small}/(2\ f_{big}))$ where f_{small} is the desired lock frequency or the actual beat-note frequency, whichever is smaller and f_{big} is whichever is bigger. The sign of the output depends on whether the beat-note is larger or smaller than the desired lock frequency and the gain sign. Note that depending on the noise on the beat-note, the output can very quickly jump back and forth between these two modes making Error Signal (DC) difficult to interpret.

Error Signal (AC)

This is an unfiltered version of Error Signal (DC) that is four times smaller, and has a DC offset. When phase locked, the output is $1.6V+2.8^{mv}/_{deg}*\theta$, where θ is the phase-error in degrees. When in frequency mode, the output is $1.6V\pm1V*(1-f_{small}/(2\ f_{big}))$.

Ref Freq

REF FREQ provides an AC coupled, buffered monitor of the reference frequency going into the PFD. Signal should be terminated with 50Ω.

Servo Out

The SERVO OUT monitors the output signal that is fed back to the laser.

Ramp

RAMP is a monitor for the ramp signal sent to the SERVO OUTPUT when the laser is in RAMP mode.

Ramp TTL

The RAMP TTL is a trigger synchronous with the ramp. Typically it is used to trigger an oscilloscope while sweeping the SERVO OUTPUT. The RAMP TTL signal is also available on the back panel as a dedicated trigger output.

Front Panel

Power (LED indicator)

All electronic modules have a blue LED power indicator on the top right side of the front panel control section. The LED requires +15V and -15V in order to light.

Offset Mode Selector

This 12 position rotary switch selects the value of N (N=8,16,32, or 64) and the reference oscilator mode (External, VCO Low, VCO High). The mode selected can be overridden with the computer control.

VCO Tune (10-turn potentiometer)

Internal VCO can drift by ~200 ppm/°C. Ex: 1 MHz/°C drift for

a 5 GHz offset. For higher stability, use an external reference.

VCO TUNE adjusts the control voltage of the internal VCO, thereby adjusting the frequency of the VCO. The frequency of the VCO can be monitored with the REF FREQ Monitor when the D2-135 is in a mode that uses the internal VCO.

Ramp Amp (1-turn knob)

The RAMP AMP sets the amplitude of the internal ramp generator.

Optical Input (SC Fiber Input; obsolete) - ***D2-135-FC only***

Optical beat-note input for the D2-135-FC.

Beat-note Input (SMA Electrical Input) - *D2-135-SMA only*

Electronic beat-note input for the D2-135-SMA.

Gain Sign (two-position switch)

The GAIN SIGN reverses the sign of the charge pump (CP) output. Effectively this selects whether the OPLS locks the slave laser to a frequency above or below the master laser frequency.

Laser State (three-position switch)

The lock switch has three positions. The lowest is the RAMP, which connects a triangle-wave to the SERVO OUTPUT, causing the laser to sweep. The amplitude of the sweep is controlled with the RAMP AMP knob. In the center position (UNLOCK) zero volts is output to SERVO OUTPUT. In the top position (LOCK) the loop filter is engaged.

Fine Gain (1-turn knob)

The FINE GAIN control adjusts the loop filter's proportional gain from 0 - 10 dB.

Coarse Gain (eight-position switch)

The COARSE GAIN sets the overall proportional gain of the circuit without changing the location of any zeros or poles in the loop filter transfer function. The coarse gain adjusts in steps of 6 dB from 0 dB to -42 dB.

Servo Output

The SERVO OUTPUT is a voltage output to control the frequency of (typically) the slave laser. When the OPLS is used with the D2-105 Laser Controller, the SERVO OUTPUT is connected to the CURRENT SERVO INPUT on the Laser Controller. The SERVO OUTPUT is the output from the loop filter when in LOCK mode, zero volts when in UNLOCK mode, and a DC balanced triangle wave when in RAMP mode.

Feed Forward Input

FEED FORWARD INPUT is a high impedance input that gets summed in with the SERVO OUTPUT. It is designed to provide feed forward when jumping the offset frequency of the laser. For example, if the

laser is jumped from an offset of 3 GHz to 6 GHz, the servo output needs to jump by a consistent voltage (e.g. 2 V). This 2 V jump can be applied to the FEED FORWARD INPUT when the offset frequency is jumped. Since the loop filter does not need to integrate the full 2 V change in output, the loop obtains a phase-lock much faster after jumping the offset frequency (typically in under 100 µs).

Right Side Panel

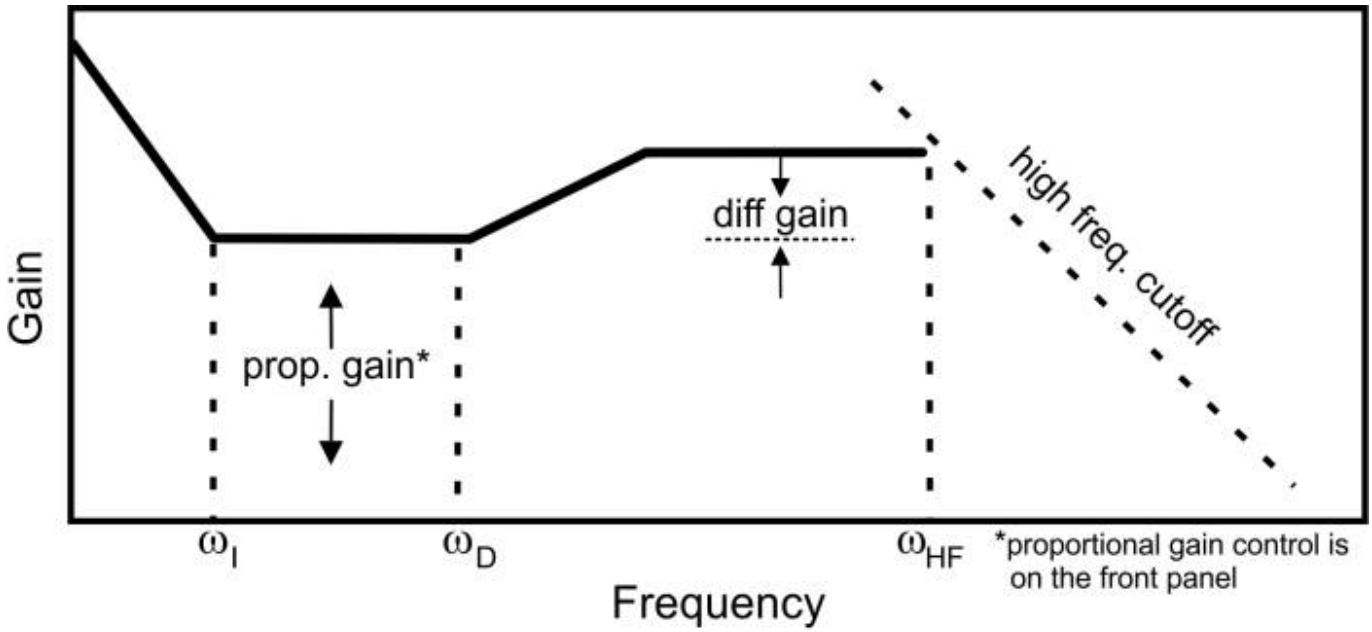

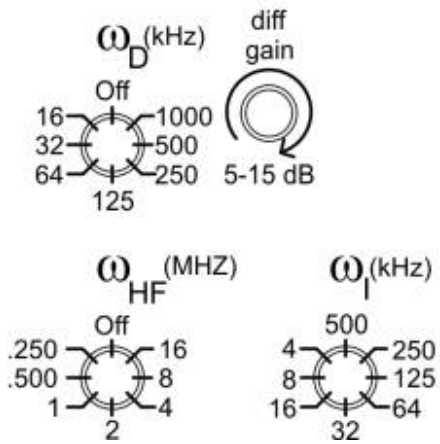

Fig. 3: Schematic of the OPLS right-side panel,showing the configurable transfer functino and its user-controls.

The feedback loop is defined by the Gain vs. Frequency plot shown above. ω_I, ω_D and ω_{HF} define three zeros in the transfer function. ω_I is the frequency where the gain switches from having integral gain to having proportional gain. ω_D is the frequency where the gain switches from proportional to differential. ω_{HF} is the frequency where the gain begins to fall off at high frequency. ω_I, ω_D, and ω_{HF} are

each controlled by a rotary switch.

Integrator (ω_I)

Sets the frequency of the integrator (ω_I). This knob selects between values between 4 kHz and 500 kHz.

Differential (ω_D)

Sets the frequency of the differentiator (ω_D). This knob selects between values between 16 kHz and 1 MHz and off (no differential gain).

Differential Gain (25-turn trimpot)

Sets the maximum differential gain. 25-turn trimpot adjusts the gain from 5 dB to 15 dB.

Integrator (ω_{HF})

Sets the frequency of the high-frequency roll-off (ω_{HF}). This knob selects values between 250 kHz and 16 MHz and off.

Ramp Master / Slave (Not Shown)

This jumper is only accessible by removing the right side panel and sets whether the ramp input is in master or slave mode. It is factory set to be in MASTER MODE. In SLAVE MODE (jumper off) the RAMP signal is generated externally and input through the back panel RAMP I/O port. In MASTER MODE (jumper on) the ramp is generated internally and is sent out to the RAMP I/O port for driving other D2-135 OPLS or D2-125 Laser Servos configured in SLAVE MODE.

Back-panel Section

Power I/O

(9-pin D-sub)

Each electronics module is powered through a 9-pin D-sub connector through either a power bridge unit or a serial cable with 9-pin D-sub connectors, which is convenient when the unit must be moved for access to the side panels. The pin outs are shown in the following figure:

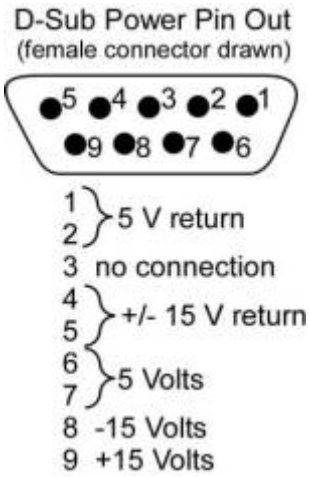

Computer Control (9-pin D-sub)

The 9 pin COMPUTER CONTROL signals allows an external computer to override the front-panel and set the mode of the OPLS. All signal pins float high and can be driven by a open drain or open collector. The pin definitions are shown below:

Pin 1 must be pulled to ground to enable computer control. Otherwise, all other pins on this cable are ignored and the OPLS state is set by the front-panel rotary switch. Pin 2 controls whether the gain sign is positive (pin 2 high) or negative (pin 2 low). For pins 3 through 6, refer to the tables below. When pin 7 is pulled to ground, the system will unlock. Allowing pin 7 to float high again will re-engage the lock. Pin 8 is not used.

		VCO External (pin 3)	
		Low	**High**
VCO High Range (pin 4)	**Low**	VCO Low	External
	High	VCO High	External

Tab. 2: Computer control response to changing VCO External (pin 3) and VC High Range (pin 4)

		N2 (pin 6)	
		Low	**High**
N1 (pin 5)	**Low**	N=8	N=32
	High	N=16	N=64

Tab. 3: Computer control response to changing N1 (pin 5) and N2 (pin 6) when Front Panel

when Front Panel Active (pin 1) is low. Active (pin 1) is low.

Ref. Freq. In

When the OPLS uses an external frequency reference, this input is used to supply the frequency reference. The input is AC coupled and 50 Ω terminated. Max power is 10 dBm.

Beat-note Monitor (÷2)

This is a digitized (i.e. square-wave) version of the input beat-note after a divide-by-2. For example, if the input beat note is 6 GHz, the monitor will have a 3 GHz output. The signal is ~0 dBm in power regardless of the strength of the input beat-note signal.

Ramp TTL

Same as the front panel signal. The RAMP TTL is a trigger synchronous with the ramp. It is used to trigger an oscilloscope while sweeping the SERVO OUTPUT.

Ramp IN / OUT

The OPLS is shipped with the RAMP in MASTER MODE. In this configuration, the RAMP IN / OUT is an output of the maximum ramp signal, generated internally. By removing the side panel the RAMP MASTER/SLAVE jumper can be accessed. When this jumper is removed, the OPLS is in slave mode. In this configuration, RAMP IN / OUT is an input of an external ramp signal. When the LASER STATE is in RAMP MODE, the SERVO OUTPUT is an attenuated version of the input to RAMP IN / OUT. The attenuation is controlled by the RAMP AMP knob. If controlling multiple lasers with multiple D2-125's or D2-135 to sync the ramps, one of the servos must be in master mode and the rest in slave mode with all the RAMP IN / OUT signals connected. In this way each laser will sweep off a synced signal and only one oscilloscope trigger is needed for all the lasers. Furthermore, a function generator can be used to input a ramp at a different frequency than the 500 Hz ramp used in the OPLS.

VCO Freq. Adjust

This input is summed in with the VCO TUNE potentiometer to set the voltage to the VCO, and thus the reference frequency when the OPLS is using the internal VCO. The impedance to this input in 1 kΩ and can accept voltages from -10V to +10V and should tune over entire VCO range, provided that the VCO TUNE potentiometer is set in the middle of the VCO range.

Understanding Gain in the OPLS

As described above in the Error Signal (DC) section, the charge pump (CP) output is proportional to phase-error when phase-locked, but the slope is proportional to the value of N. This means that when N is increased, the same voltage on the CP monitor reflects twice as much phase-error. The result is that the input to the loop filter has half as much gain with N=16 than with N=8. To compensate, the OPLS internally increases the gain of the Loop Filter by a factor of N so the user does not see a change in the closed-loop gain when changing the value of N.

Understanding the Transfer Function

The charge pump in the OPLS outputs a signal proportional to the phase-error and the transfer function is as shown in figure 3. However, the OPLS will typically be used to control a *frequency*-tunable device (such as a laser). In this configuration, the effective loop filter is not the one shown in figure 3, but includes a extra integration corresponding to converting the phase-error input to a frequency error. Thus, ω_I sets the frequency transition from single-integration to double-integration and ω_I from single-integration to proportional feedback. It is important to understand this 'hidden' integrator when configuring the loop filter parameters.

Calculating Phase Noise

The phase-noise specified in Section 1.3 is referenced to the phase frequency detector (PFD) at 1 Hz. To convert that to the noise measured on the actual beat-note, it must be rescaled with the following formula:

$$\text{D2-135 Phase-Noise Floor} = -213 + 20\text{Log}(N) + 10\text{Log}(F_{REF})$$

where N is the value of the divider and F_{REF} is the reference frequency as measured in Hz. For more details, please see http://www.vescent.com/2012/calculating-phase-noise-from-the-d2-135/ .

Help

A quick-start guide is available for the D2-135. For further assistance, please contact us at:
+1(303) 296-6766 or
info@vescent.com

[1] Note the power in the beat-note is not the same as total power. Because the optical input uses multi-mode fiber, the spatial mode overlap between the two lasers is not guaranteed. If the overlap between the two lasers is poor, there can be very little power in the beat-note despite large optical power.

[2] Low frequency beat-notes are in principle possible with the D2-135-SMA provided the low-frequency beat-note is a square-wave and not sine-wave input and that the loop bandwidth ~10 times lower than your reference frequency.

[3] Maximum Offset Frequency depends on power of input beat-note signal.

[4] See Calculating Phase Noise section for a full description

[5] Not including internal gain compensation for N divider. See Understanding Gain in the OPLS for more details.

[6] Approximate value as exact value depends on wavelength of the light and spatial overlap between the lasers.

[7]

D2-135-FC was shipped with an FC to SC multimode patch cord